Privacy-Preserving Analytics: Cryptography

Roman Walch

Privacy-Preserving Cryptography

- Traditional Cryptography:
  - Encryption provides confidentiality
  - Tags/Signatures provide integrity and authenticity
  - ⇒ Secure data storage/transmission
- New picture of cryptography:
  - Computing with unknown data
  - ⇒ Secure function evaluation
- Protocols and Primitives:
  - Secure Multi-party Computation (MPC)
  - Fully Homomorphic Encryption (FHE)

Cryptographic Protocols and Primitives

Secure Multi-party Computation

MPC – General Idea

- Many processes in our world are solved by using a trusted third party
  - Lawyers
  - Notaries
  - Data markets
  - ...
- Not always possible to employ this approach
  - Lack of trust
  - Sensitive data
  - ...
- Can we cope without a trusted party?

Yao's Millionaires' Problem

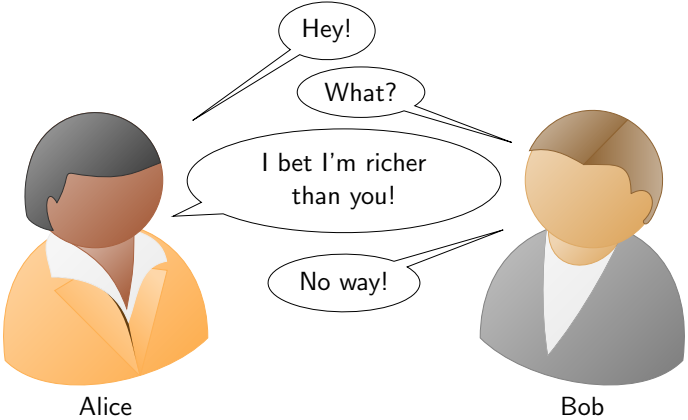

Yao's Millionaires' Problem

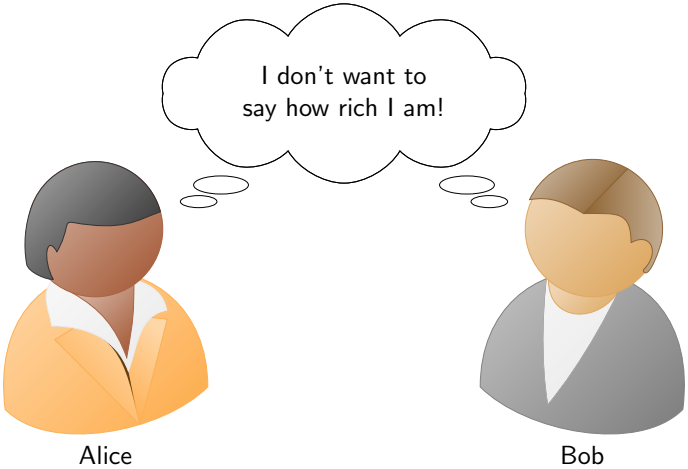

MPC – Secure Function Evaluation

- Generalization of the Problem
  - n parties
  - Each party has input x_i
  - Parties jointly evaluate Function: $F(x_1, \ldots, x_n)$
- Construct protocol that ensures:
  - Some/All users learn output $F(x_1, \ldots, x_n)$
  - Each user learns nothing about inputs of other parties
  - Each user learns nothing about any intermediate values
- Yao's Millionaires' Problem [Yao82]:
  - $F(x_1, x_2) = x_1 > x_2$
- MPC has only recently become practical

Example Use Case – Collaborative Learning

- Several Parties train a ML model on combined dataset
- Parties do not want to disclose their dataset
  $\Rightarrow$ MPC
  - Parties input: dataset
  - Output: ML model
  - Inputs remain private
- Similar: Private classification using MPC

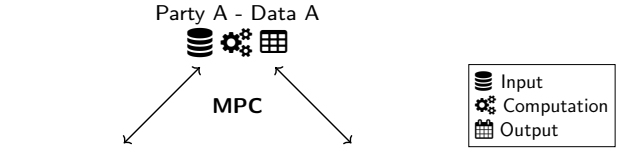

Cryptographic Protocols and Primitives

Fully Homomorphic Encryption

Outsourcing Computation

- Distributed systems, cloud computing
  - Outsourcing computation to much more powerful servers
  - Caveat: Have to trust other party
- Idea: encrypt data
  - Classical encryption ensures confidentiality of data
  - However, not possible to operate on encrypted data
  - Small change in ciphertext $\rightarrow$ huge change in plaintext

$\Rightarrow$ use Fully Homomorphic Encryption

Fully Homomorphic Encryption (FHE)

- Operate on encrypted, unknown data
- Without knowing secret decryption key

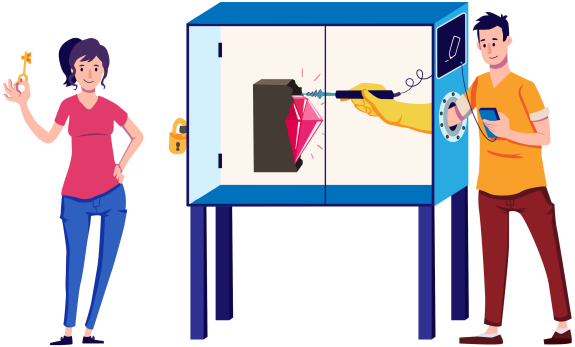

Fig.: ©TU Graz.

Fully Homomorphic Encryption (FHE)

- Dream: All operations are possible on encrypted data
- Theoretical requirement:
  - Addition and multiplication
  - Arbitrary times
- 2009: Craig Gentry: "A fully homomorphic encryption system" [Gen09]
  - One of the biggest advances in modern cryptography
- Since then:
  - Many variations and improvements

Example Use Case – Outsourcing Computation

- Client wants to use a Server for computations
  - Without revealing data
  - E.g.: "Machine Learning as a Service"
- Workflow:
  - Client encrypts data
  - Server computes on encrypted data ⇒ encrypted result
  - Client can decrypt the result
  - Only client knows secret decryption key

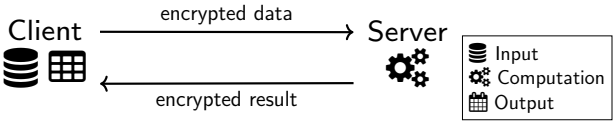

Use Case: Private Set Intersection

[Kal+19]

Motivation

- Two parties want to find common database entries
  - Common customers for targeted advertisement
  - Contact discovery for messaging services (e.g. WhatsApp)
- Trivial solution:
  - Transmit database and compare items
  - $\Rightarrow$ leaks database!
- Use Private Set Intersection (PSI) instead
  - other party learns nothing about items outside intersection

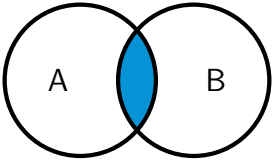

$A \cap B$

Idea

- Transmit encrypted database and compare items
- For comparison:
  - Encryption under same key required
  - But: cannot give both parties the key (enables decryption of transmitted set)
- Solution:
  - Encrypt using a Oblivious Pseudorandom Function

Oblivious Pseudorandom Function

- Encrypt using a Oblivious Pseudorandom Function

Classical Encryption – Pseudorandom Function

$$y = \mathrm{PRF}_k(x)$$

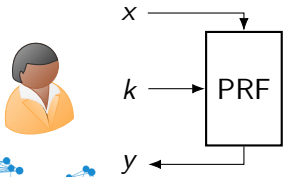

Oblivious Pseudorandom Function

- Encrypt using a Oblivious Pseudorandom Function
  - Evaluate an encryption using MPC

Classical Encryption – Pseudorandom Function

$$y = \mathrm{PRF}_k(x)$$

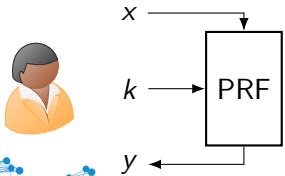

MPC Encryption – Oblivious Pseudorandom Function

$$y = \mathrm{PRF}_k(x)$$

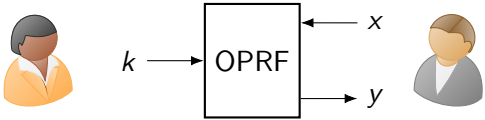

PSI using OPRF Evaluation

Basic protocol idea:

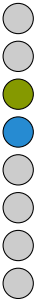

Party A

Party B

PSI using OPRF Evaluation

Basic protocol idea:

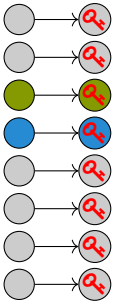

Party A a_k

Party B

PSI using OPRF Evaluation

Basic protocol idea:

PSI using OPRF Evaluation

Basic protocol idea:

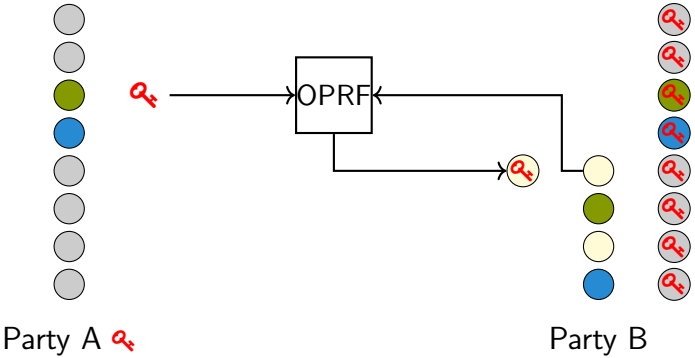

PSI using OPRF Evaluation

Basic protocol idea:

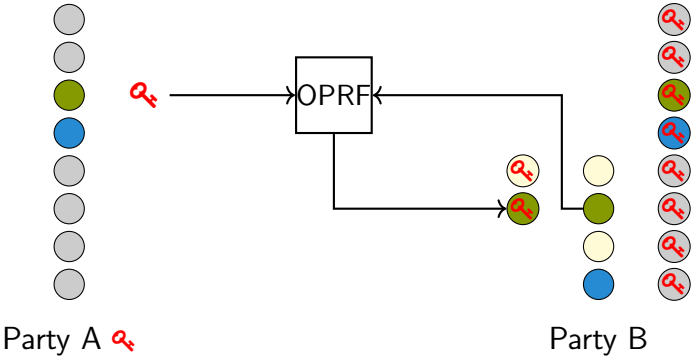

PSI using OPRF Evaluation

Basic protocol idea:

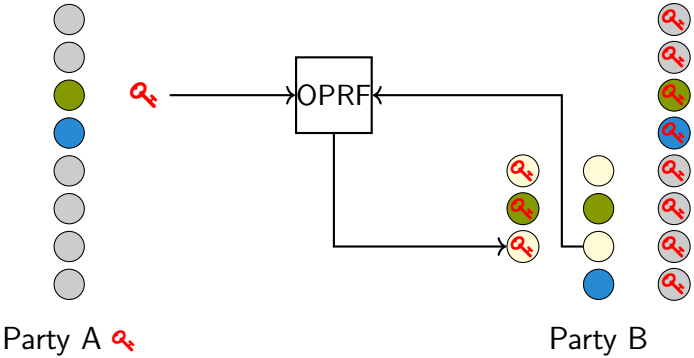

PSI using OPRF Evaluation

Basic protocol idea:

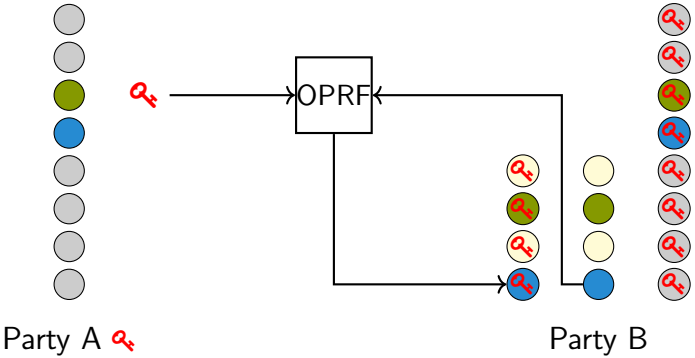

PSI using OPRF Evaluation

Basic protocol idea:

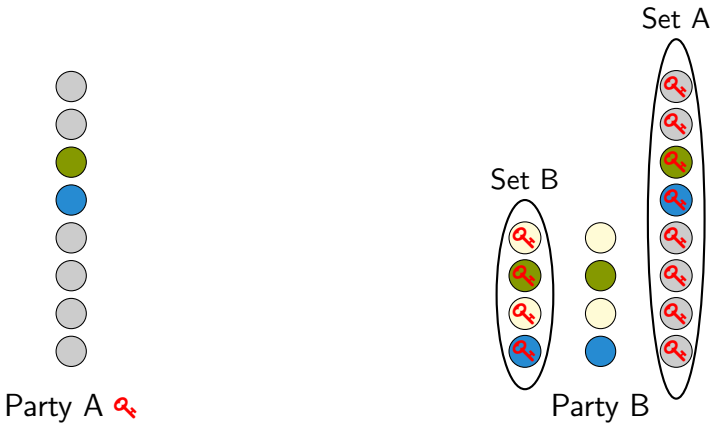

PSI using OPRF Evaluation

Basic protocol idea:

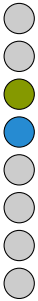

Party A

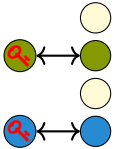

Party B

Join Safe-DEED's Professional Partners Community

- Early access to Safe-DEED demonstrators and prototypes
- One use-case discussion with a research partner of your choice, at the Safe-DEED partner's location
- Contact to other companies interested in privacy enhancing technologies

`https://safe-deed.eu/`

Safe-DEED

Limitations and Outlook

Limitations

- Multi-party Computation
  - Huge communication complexity
  - Performance overhead depends on security guarantees
  - Evaluation requires parties to know F (f.e. structure of Neural Network)
- Fully Homomorphic Encryption
  - Huge performance overhead
  - Ciphertext expansion
  - Only addition and multiplication (i.e. ReLU requires approximation)
  - Small multiplicative depth of evaluated function

Conclusion

- Very promising techniques to preserve privacy
  ... but still inefficient
- Performance ...
  - depends on security guarantees
  - good enough for some applications
  - in general not yet sufficient
- Right now lots of research done for MPC, FHE, and PSI

QUESTIONS

www.know-center.at

Roman Walch

Lukas Helminger

Andreas Trügler

Know-Center GmbH
Research Center for Data-Driven
Business and Big Data Analytics
Inffeldgasse 13/6
8010 Graz, Austria

Firmenbuchgericht Graz
FN 199 685 f
UID: ATU 50367703

gefördert durch das Programm COMET (Competence Centers for Excellent Technologies), wir danken unseren Fördergebern:

Bibliography I

[Gen09] Craig Gentry. **Fully homomorphic encryption using ideal lattices**. STOC. ACM, 2009, pp. 169–178 (cit. on p. 12).

[Kal+19] Daniel Kales, Christian Rechberger, Thomas Schneider, Matthias Senker, and Christian Weinert. **Mobile Private Contact Discovery at Scale**. USENIX Security Symposium. USENIX Association, 2019, pp. 1447–1464 (cit. on p. 14).

[Yao82] Andrew Chi-Chih Yao. **Protocols for Secure Computations (Extended Abstract)**. FOCS. IEEE Computer Society, 1982, pp. 160–164 (cit. on p. 7).